Karta produktu: AIRKNIFE ACI AK08 3400-3490MM

product code: AK08 3490

Warianty produktu

Index	Price
AIRKNIFE ACI AK08 3400-3490MM **AK08 3490**	Product prices will become visible after signing in.
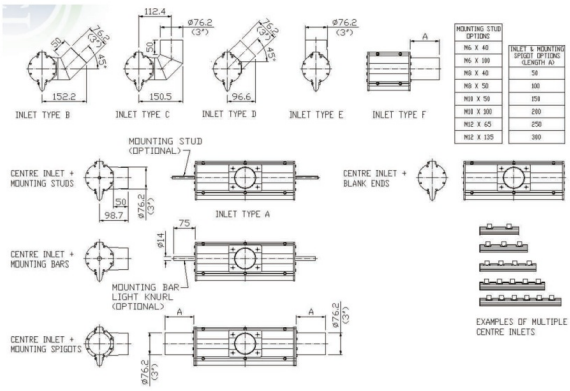
Gallery