Karta produktu: SCL e08-MD MOR IE3 M.E. 100 - 4.0kW - 4.8kW 380-415/220-240V 50Hz 440-480/255-280V 60Hz- IE3 - ATEX 3GD - IP65 - CL. F - TROP. PTO - NATURAL FINISH. Ex h IIC T3 Gc - Ex h IIIC T200°C Dc



product code: SE08MD50+0000

Power [kW]	4
Power supply [V/Hz]	50
Speed [rpm]	2910
Flow rate [m3/h]	255
Suction [mbar]	400
Compression [mbar]	350
Noise level [dB(A)]	73
Weight [kg]	65
Class	IE3
Protection class [IP]	55
Insulation Class	F

Warianty produktu

Index	Price
SCL e08-MD MOR IE3 M.E. 100 - 4.0kW - 4.8kW 380-415/220-240V 50Hz 440-480/255-280V 60Hz- IE3 - ATEX 3GD - IP65 - CL. F - TROP. PTO - NATURAL FINISH. Ex h IIC T3 Gc - Ex h IIIC T200°C Dc **SE08MD50+0000**	Product prices will become visible after signing in.

Gallery

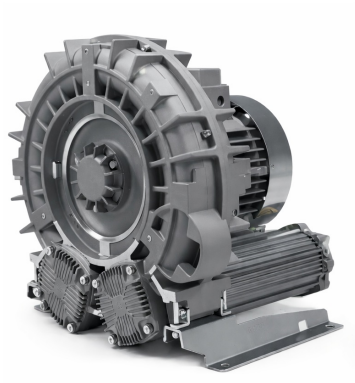

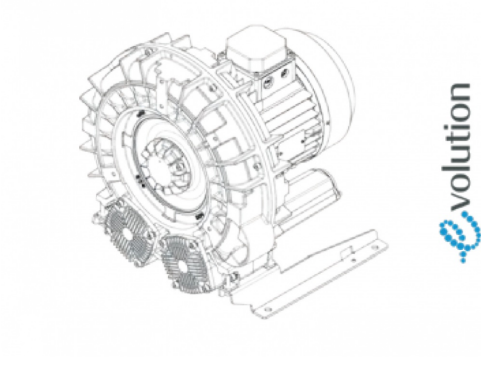

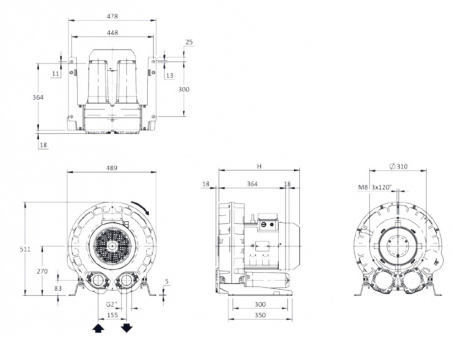
478
448
Z5
11
13
364
300
18
489
511
270
83
5
92
155
H
38
364
18
300
350
∅ 310
M8 3x120°