Karta produktu: Single Stage Double Impeller Sidechannel Blowers FPZ SCL e12TS, IE3 - 3 Phase Motor, 15 (1) kW

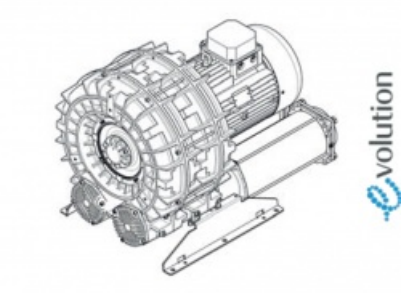

**product code:** **SE12TS50+0003**

| | |
|---|---|
| Moc [kW] | 15 |
| Zasilanie [V/Hz] | 50 |
| Prędkość obr. [obr./min] | 2935 |
| Wydajność [m3/h] | 2104 |
| Ssanie [mbar] | 150 |
| Sprężanie [mbar] | 150 |
| Poziom hałasu [dB(A)] | 84 |
| Waga [kg] | 190 |
| Klasa silnika | IE3 |
| Zabezpieczenie [IP] | 55 |
| Izolacja | F |

## Warianty produktu

| Index | Price |
|---|---|
| **Single Stage Double Impeller Sidechannel Blowers FPZ SCL e12TS, IE3 - 3 Phase Motor, 15 (1) kW**<br>**SE12TS50+0003** | Product prices will become visible after signing in. |
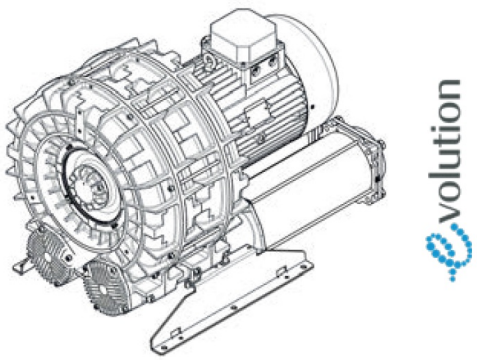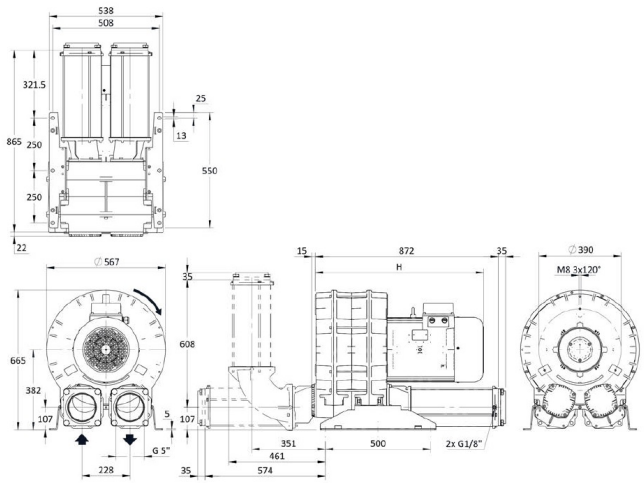
## Gallery