Karta produktu: Double Stage Double Impeller Sidechannel Blowers FPZ SCL e10TD, IE3 - 3 Phase Motor, 15-17 kW

product code: **SE10TD50+0000**

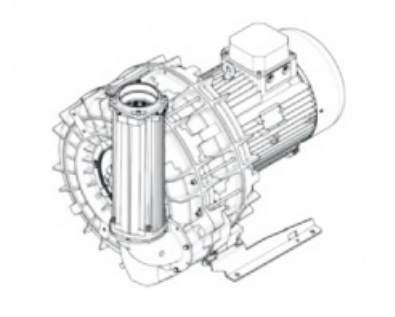

Warianty produktu

Index	Price
Double Stage Double Impeller Sidechannel Blowers FPZ SCL e10TD, IE3 - 3 Phase Motor, 15-17 kW **SE10TD50+0000**	Product prices will become visible after signing in.

Gallery

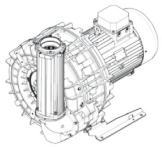

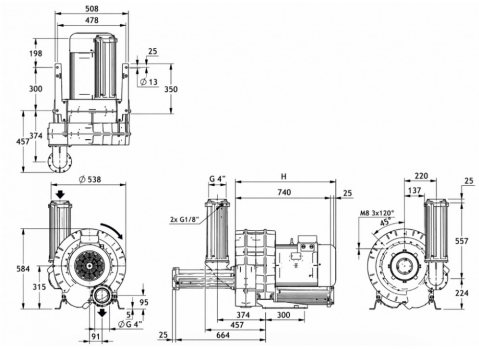

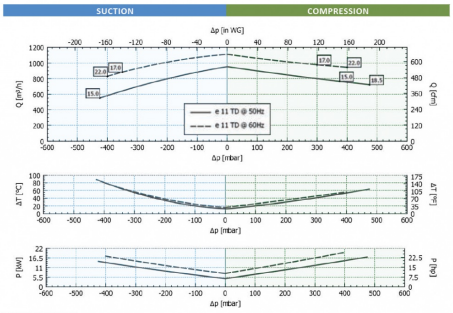

Tolerance on indicated values ± 10%.
Data subject to change without notice.
Curves referring to air at a temperature of 20 °C and atmospheric pressure of 1013 mbar (abs).