Karta produktu: Retaining ring SEGW110

product code: **SEGW110-MTM**
product ean: **5907772129609**

d1 [mm]	110
d2 [mm]	114
d3 [mm]	117
d5 min [mm]	3,5
amax [mm]	10,4
~b [mm]	9
s +/- 4% [mm]	4
m H13 [mm]	4,15
n min [mm]	6

Warianty produktu

Index	Price
Retaining ring SEGW110 **SEGW110-MTM**	Product prices will become visible after signing in.
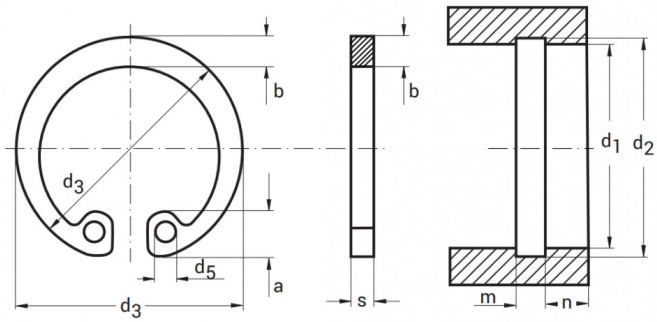
Gallery