Karta produktu: Retaining ring SEGW115

product code: **SEGW115-MTM**
product ean: **5907772129616**

d1 [mm]	115
d2 [mm]	119
d3 [mm]	122
d5 min [mm]	3,5
amax [mm]	10,5
~b [mm]	9,3
s +/- 4% [mm]	4
m H13 [mm]	4,15
n min [mm]	6

Warianty produktu

Index	Price
Retaining ring SEGW115 **SEGW115-MTM**	Product prices will become visible after signing in.
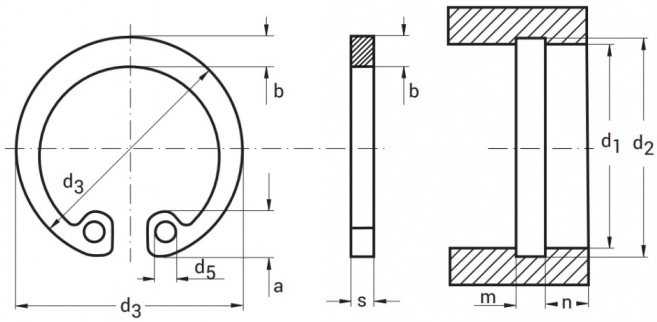
Gallery