Karta produktu: Retaining ring SEGW120

product code: **SEGW120-MTM**
product ean: **5907772129647**

d1 [mm]	120
d2 [mm]	124
d3 [mm]	127
d5 min [mm]	3,5
amax [mm]	11
~b [mm]	9,7
s +/- 4% [mm]	4
m H13 [mm]	4,15
n min [mm]	6

Warianty produktu

Index	Price
Retaining ring SEGW120 **SEGW120-MTM**	Product prices will become visible after signing in.
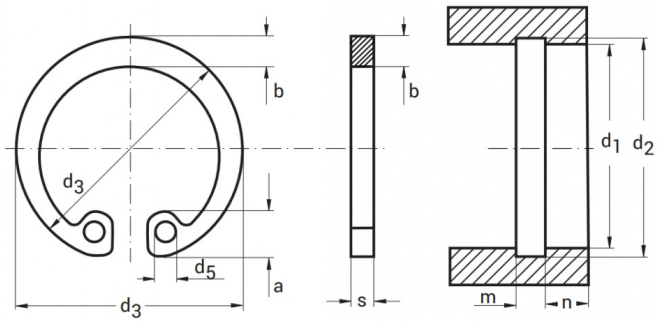
Gallery