Karta produktu: Retaining ring SEGW29(100pcs)

product code: **SEGW29(100szt)-MTM**
product ean: **5907772129807**

d1 [mm]	29
d2 [mm]	30,4
d3 [mm]	31,1
d5 min [mm]	2
amax [mm]	4,8
~b [mm]	3
s +/- 4% [mm]	1,2
m H13 [mm]	1,3
n min [mm]	2,1

Warianty produktu

Index	Price
Retaining ring SEGW29(100pcs) **SEGW29(100szt)-MTM**	Product prices will become visible after signing in.
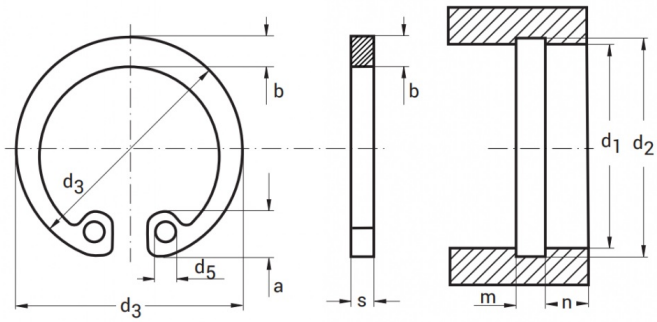
Gallery