Karta produktu: Retaining ring SEGW180

product code: **SEGW180-MTM**
product ean: **5907772129715**

d1 [mm]	180
d2 [mm]	185
d3 [mm]	185,5
d5 min [mm]	4
amax [mm]	14,2
~b [mm]	13,2
s +/- 4% [mm]	4
m H13 [mm]	4,15
n min [mm]	7,5

Warianty produktu

Index	Price
Retaining ring SEGW180 **SEGW180-MTM**	Product prices will become visible after signing in.
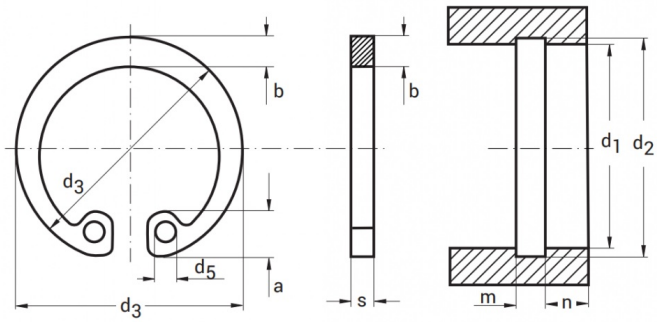
Gallery